Sheer
Driving Pleasure

i8

IMPORTANT NOTICE

Due to the availability of equipment features, functions and services varies between markets, please kindly take note that the equipment features, functions and/or services listed in the below, although having been published in this brochure (or any material published by BMW AG or its dealers worldwide in any format, if any), are not available in Hong Kong.

- Apple CarPlay Preparation
- Automate My Habits
- BMW Drive Recorder
- BMW Connected+
- BMW Laserlight
- Concierge Service
- Connected Command
- Connected Music
- Digital Key
- Driving Assistant Plus/ Professional
- In-Car Experiences
- Parking Place Assist
- Predictive Preconditioning
- Real Time Traffic Information
- Remote Services
- Remote Software Upgrade
- Weather Guard

Version 06/2020

BORN ELECTRIC.

THE NEW BMW i8 ROADSTER AND THE NEW BMW i8 COUPÉ.

DIGITAL DISCOVERY: THE NEW BMW BROCHURES APP.

More information, more driving pleasure: The new BMW brochures app offers you a brand new digital and interactive BMW experience. Download the BMW brochures app for your smartphone or tablet now and explore new perspectives of your BMW.

INNOVATION AND TECHNOLOGY.

18 Drivetrain and driving dynamics

22 Driver assistance and safety

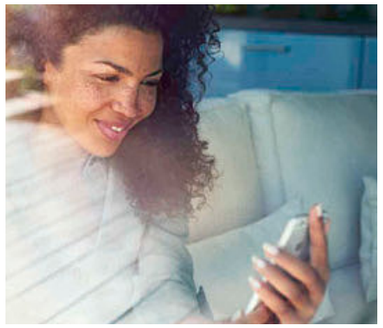

24 Connectivity and infotainment

26 Loading comfort and mobility services

28 Materials and workmanship

INDIVIDUALITY AND DIVERSITY.

32 Exterior equipment

34 Interior equipment

38 Equipment highlights

42 Services

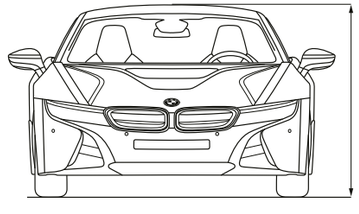

43 Technical data

ONLY THOSE
WHO GO BEYOND
THE FAMILIAR
MAKE NEW DISCOVERIES.

ONLY THOSE
WHO SEEK THE
EXTRAORDINARY
CAN CREATE SOMETHING UNIQUE.

ONLY THOSE
WHO QUESTION
EVERYTHING

FIND NEW ANSWERS.

ONLY THOSE
WHO ARE
PREPARED TO LEAD
CAN BLAZE NEW TRAILS.

ONLY THOSE WHO HAVE AN EXTRAORDINARY DRIVE

CAN ACCELERATE THE FUTURE.

ONLY THOSE
WHO CAN RELY
ON EXPERIENCE
CAN DEVELOP
INNOVATIONS.

THE EVOLUTION OF A REVOLUTION.

THE NEW BMW i8 ROADSTER AND THE NEW BMW i8 COUPÉ.

DRIVE AND DRIVING DYNAMICS IN THE NEW BMW i8 ROADSTER AND THE NEW BMW i8 COUPÉ.

SPECTACULAR APPEARANCE WITH STRONG ACCELERATION.

The new BMW i8 Roadster and the new BMW i8 Coupé are one thing above all else: sports cars designed for driving dynamics and agility. The powertrain with powerful electric motor, BMW TwinPower Turbo 3-cylinder petrol engine and Steptronic transmission makes excellent acceleration values possible with low fuel consumption – in addition, the new high-voltage battery extends the purely electric range to up to 55 km[1]. The suspension also contributes to BMW's driving pleasure with its intelligent all-wheel drive and Adaptive suspension. The innovative LifeDrive vehicle architecture separates the passenger compartment from the chassis – not only lowering the centre of gravity, but also reducing the weight by using carbon fibre, while increasing stability and safety.

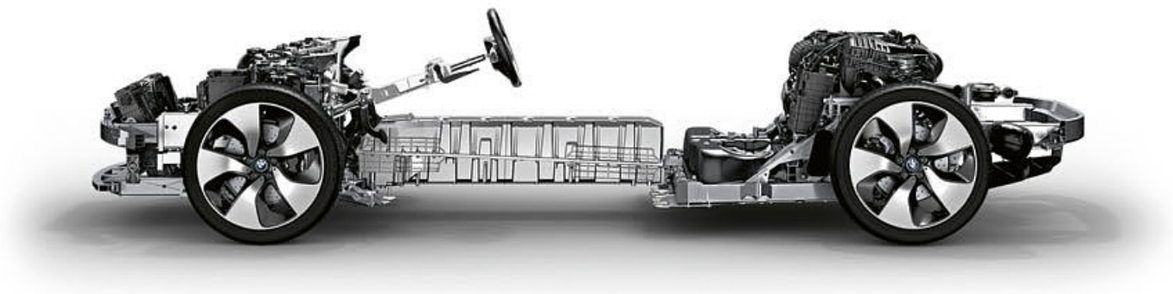

LIFE MODULE PASSENGER CELL CFRP: The passenger compartment represents a revolution in the production technology. Since carbon-fibre passenger compartments were manufactured manually and thus expensive, their usage was hardly possible for a long time. BMW i redefined the automotive production with the first series production of the carbon-fibre passenger compartment, developed solely by BMW i. The use of carbon fibre accounts for a 50 percent reduction in weight as compared to steel and up to 30 percent as compared to aluminium.

ROOF CONCEPT: The three-coat fabric top[2] is taut and indulges with the noise and weather comfort of a hardtop. The vertical rear window[2] can be opened and closed independently of the hood and gives that fresh air experience even in poor weather.

DRIVE MODULE: The Drive module in the new BMW i8 Roadster and the new BMW i8 Coupé is made of lightweight aluminium and includes all suspension components: the structural and impact-absorbing elements, the drivetrain and lithium-ion high-voltage battery.

CFRP ROOF: Like the passenger compartment, the roof of the new BMW i8 Coupé is also manufactured from weight-saving carbon fibre. Moreover, the CFRP roof caters for perfect aerodynamics of the vehicle due to its elegant and curved shape.

[1] Range in everyday operation depends on various factors, in particular: individual driving style, route characteristics, outside temperature, heating/air conditioning, pre-conditioning.
[2] Exclusively available for BMW i8 Roadster.

STEPTRONIC TRANSMISSION: The 6-speed Steptronic transmission is coupled to the petrol engine and perfectly coordinated with the plug-in hybrid system. The driver can select Sport mode via the electronic gear selector, which shortens the switching times and also allows for manual gear changes. The E-motor on the front axle is coupled to a two-stage transmission.

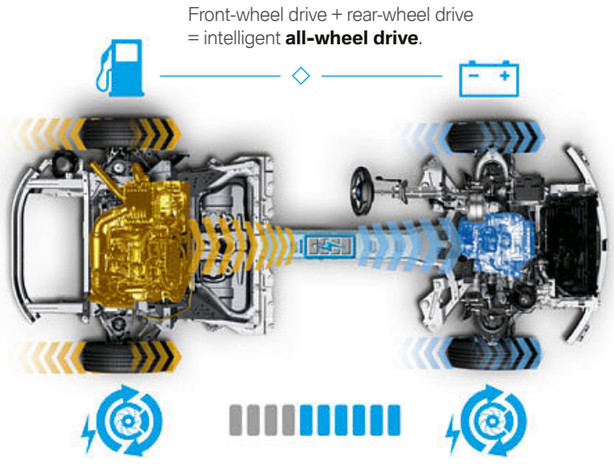

ALL-WHEEL DRIVE FOR FULL TRACTION: The new BMW i8 Roadster and the new BMW i8 Coupé combine the high-torque acceleration of the electric motor on the front axle with the power of the combustion engine on the rear axle, which is efficiently brought to the road by a 6-speed Steptronic transmission. The concept thus allows the optimum drive configuration to be made available depending on the situation. Although the new BMW i8 Roadster and the new BMW i8 Coupé can drive purely electrically, the particular attraction lies in the combination of both engines, which play to their advantages and complement each other perfectly. The situation-specific load control system, for example, while going on a curve, varies the ratio between the drive torques acting on the front and rear wheels in favour of a rear-mounted design, thus increasing the precision of steering. On dry and wet roads, for example, the driver has maximum traction over all four wheels when accelerating, which allows even better directional stability right up to the limit. But even in winter, you benefit from the two independently driven axles: The four intelligently driven wheels increase traction and safety on slippery roads. The new BMW i8 Roadster and the new BMW i8 Coupé therefore offer you a highly dynamic acceleration experience over the entire speed range.

ADAPTIVE SUSPENSION: The adaptive suspension allows the driver to change the damper characteristics to driver demands, either for an exceptionally smooth ride or for optimised driving dynamics. As well as the default COMFORT setting, which ensures greater driving comfort, there is also a SPORT mode available to the driver. In that case, the shock absorbers are tightened to support an athletic, dynamic driving style. This setting is activated via the gear selector. Regardless of the chosen setting, the adaptive suspension adapts the damper force on every single wheel to the relevant driving situation in fractions of a second, improving drive stability and safety in the process.

DRIVER ASSISTANCE AND SAFETY IN THE NEW BMW i8 ROADSTER AND THE NEW BMW i8 COUPÉ.

SUSTAINABLE SAFETY.

The new BMW i8 Roadster and the new BMW i8 Coupé also demonstrate their innovative strength in terms of driver assistance and safety. With the new BMW Laserlight, for example, the visibility at night doubles up to 600 meters. The Driving Assistant supports you day and night: The camera-based system package helps to avoid collisions and personal accidents, and brakes automatically in an emergency. It also supports you while parking and manoeuvring through the virtual display of the vehicle in its complete surroundings. The object recognition also warns you of crossing vehicles or persons and displays them in the information display. In short, with the new BMW i8 Roadster and the new BMW i8 Coupé, you can literally see way ahead.

DRIVING ASSISTANT: The safety equipment Driving Assistant[1, 2] supports you in a variety of traffic situations and helps to avoid collisions or to minimise their consequences. It combines Lane Departure Warning, Approach control warning, Person warning with light braking function, High-beam assistant, Speed Limit Info, Rear view camera and the Surround View system.

BMW LASERLIGHT: In laser high-beam mode, BMW Laserlight[1] illuminates a range of up to 600 m, nearly twice as far as that of conventional headlights. By using this headlight technology, BMW has improved safety by enhancing visibility when driving in the dark. Blue accents and „BMW Laserlight“ lettering visually indicate the technology.

ACOUSTIC PROTECTION FOR PEDESTRIANS: Acoustic protection[1] for pedestrians generates a turbine-like sound when driving in purely electric mode at a speed of up to 30 km/h in order to make other road users aware of the vehicle‘s presence as it approaches them in an otherwise almost completely silent manner. The system is activated automatically whenever the vehicle is started and can be deactivated at the touch of a button as the driver desires.

LED HEADLIGHTS: The particularly powerful front headlights utilise state-of-the-art LED technology for the low and high-beam headlights, side lights, daytime running lights and indicators. The road is better illuminated and objects at night appear in greater contrast. Headlight range control happens automatically. The side lights and daytime running lights come in a U-shape look.

[1] Available as optional equipment.
[2] Function may be limited in darkness, fog or bright glare.

CONNECTIVITY IN THE NEW BMW i8 ROADSTER AND THE NEW BMW i8 COUPÉ.

INNOVATIONS THAT TAKE YOU FORWARD.

BMW Connected is a personal mobility assistant which facilitates everyday mobility and assists drivers in reaching their destinations relaxed and on time. All relevant services are also remotely available at all times via the smartphone app or a smart watch. Destinations that have been found on the web or via other application such as Yelp, Apple Maps, Google Maps can be easily and conveniently imported into BMW Connected and seamlessly transferred to the vehicles navigation system with just a click. Meetings including addresses and intended arrival times saved in the smartphone calendar are automatically imported into the BMW Connected mobility agenda. Based on the current location and traffic conditions, BMW Connected calculates the arrival time, informs you in time and guides you on your walk from the parked car to the final destination. The BMW Connected app can be downloaded from the Apple App Store or the Google Play Store.

Some ConnectedDrive Services may differ between countries. Please consult your local BMW partner for more information.

REMOTE SERVICES:
With the Remote Functions of the BMW Connected App (available in the Apple App Store), various vehicle-related functions, such as locking and unlocking the car, can be operated remotely. Just as the BMW ConnectedDrive customer portal, the app also offers the opportunity to access vehicle information such as range or the status of the windows and doors.[1, 2]

INTELLIGENT VOICE ASSISTANT:
Intelligent Voice Assistant understands natural speech and optimises recognition rate over a large range of individual and situational variations thanks to Offboard voice processing[1, 3]. It also understands linguistic varieties, dialects and jargon. This enables a substantially greater range of possibilities when dictating text messages or emails.

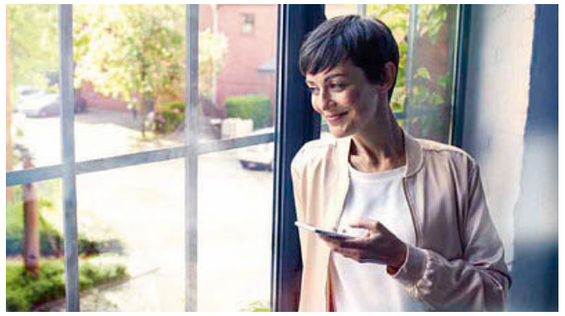

SHARE LIVE TRIP STATUS: The “Share live trip status” function allows you to securely share your time of arrival and current location with friends and family during a trip.[2]

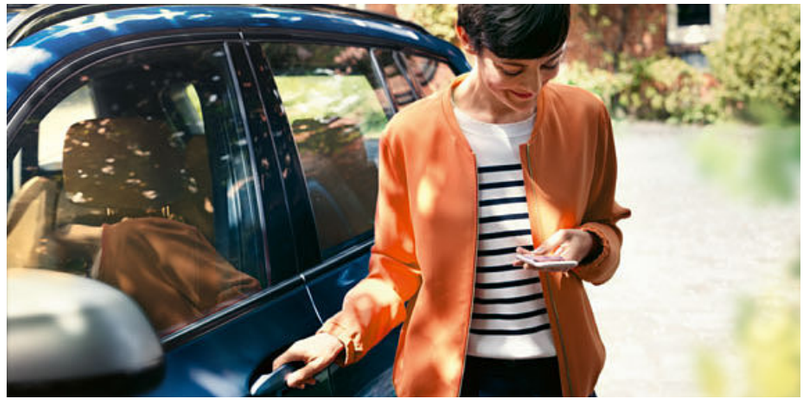

DOOR-TO-DOOR NAVIGATION: Get to your appointments relaxed and on time: no problem thanks to the “Door-to-door navigation”[5] function of the BMW Connected app. Upon arrival at your destination, you can use your smartphone or a connected smart watch[4] to be guided from the parked car to the final destination by foot.

[1] Available as optional equipment.
[2] Requires BMW ConnectedDrive Services.
[3] Off-board speech recognition, as a functional extension, can be booked in the ConnectedDrive Store.
[4] Smartphone and smartwatch are not part of BMW Connected.
[5] Only available in conjunction with ConnectedDrive Services and Remote Services.

CHARGING COMFORT AND MOBILITY SERVICES IN THE NEW BMW i8 ROADSTER AND THE NEW BMW i8 COUPÉ.

SPORTY AND FLEXIBLE AT THE SAME TIME.

NOW MOBILITY SERVICES: Three innovative mobility services are available for the new BMW i8 Roadster and the new BMW i8 Coupé: ChargeNow, the world's largest network of public charging stations, the integrated premium parking solution ParkNow and the car-sharing service DriveNow.

CHARGE NOW: With ChargeNow, the BMW Group offers simple access to a growing – and currently the largest worldwide – network of partners offering charging stations. Customers can find the partner charging stations directly via the ConnectedDrive navigation system integrated in the vehicle, via the ChargeNow app, or on the Internet page.

PARK NOW: ParkNow is the innovative digital parking service from the BMW Group which enables ticketless and cashless parking on the roadside and in car parks via an app. The convenient start/stop function with up-to-the-minute billing means no more parking tickets or paying too much.

DRIVE NOW: DriveNow is the car-sharing service from the BMW Group and from Sixt in Europe. Customers can easily reserve and lease BMW and MINI vehicles where and when they need them. Available vehicles can be found via the DriveNow app, the website, or directly on the street. Billing of journeys is always minute-based.

INNOVATIVE CHARGING SOLUTIONS FROM BMW 360° ELECTRIC.

SHORT CHARGING PERIOD FOR UNENDING ELECTRIFYING DRIVING PLEASURE.

AC BASIC CHARGING: With the new BMW i8 Roadster and the new BMW i8 Coupé, the driver and front passenger travel not only in a sporty way but also extremely flexibly. At home, the vehicle can be easily charged with AC power from any household power outlet. This can be done faster and more comfortable with the innovative BMW i Wallboxes: Conveniently mounted by the BMW i installation service, they reduce the charging time to less than 3 hours[1]. With BMW Digital Charging Service, the new BMW i8 Roadster and the new BMW i8 Coupé, among other things, can automatically be recharged at the best possible time – naturally with electricity from the driver's own solar system. With the extended mobility services ChargeNow and ParkNow, a package is created that offers charging and parking possibilities in every situation.

[1] Dependent on local electricity infrastructure and the selected optional equipment.

SUSTAINABILITY IN THE NEW BMW i8 ROADSTER AND THE NEW BMW i8 COUPÉ.

BUILT WITH PERFECTION.

95 %

OF THE MATERIAL USED FOR THE PRODUCTION OF A BMW i8 IS RECYCLABLE.

100 %

OF THE PRODUCTION ENERGY RESULTS FROM SUSTAINABLY GENERATED ELECTRICITY DURING THE PRODUCTION OF THE BMW i IN THE LEIPZIG BASED BMW FACTORY.

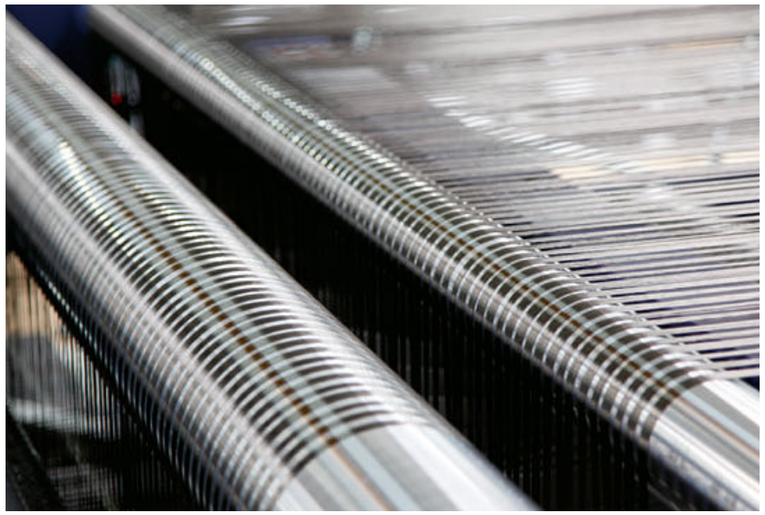

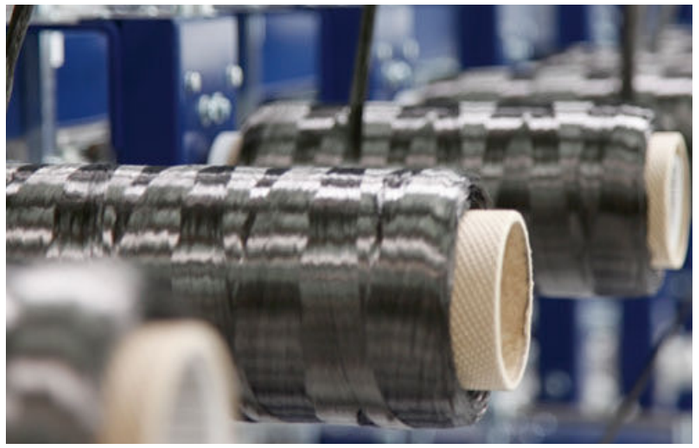

Sustainability in the new BMW i8 Roadster and the new BMW i8 Coupé does not begin on the road but starts much earlier. During the development it was ensured that resources are used as sparingly as possible. For example, energy exclusively from renewable energy resources is used for manufacturing, and the consumption of water was reduced by around 70 percent. Special attention is paid to environmental friendliness during selection of the material that is to be used. For example, the leather used is tanned with olive leaf extract and combines sustainability with a finer feel. In the new BMW i8 Roadster and BMW i8 Coupé it is not just about the start and the finish but also about what happens before and after that.

For the production of carbon fibre, a factory was established in Moses Lake, Washington in the USA. 100 percent of the electricity needed for the production of the carbon fibre is generated with renewable hydroelectric energy. Spools with so-called rovings – which consist of approximately 50,000 carbon fibres with a thickness of 0.007 millimetre – arrive by ship in Germany. In Wackersdorf, Bavaria, the fibres are processed into textile mats, which form the basic raw material for the production of the CFRP parts. CFRP components are manufactured in the pressing plants in Landshut and Leipzig from the delivered carbon-fibre mats, while the final assembly and quality assurance happens in Leipzig.

INDIVIDUALITY
AND DIVERSITY.

THE EXTERIOR DESIGN.

AN ATHLETIC SPORTS CAR THAT SHINES WITH ITS INDIVIDUAL STYLE: The exterior colours E-Copper and Crystal White pearl effect have been developed exclusively for the new BMW i8 Roadster and the new BMW i8 Coupé. The metallic paints highlight the flowing character of the lines and the shape of the car body. Depending on the exterior colour, the colour scheme of the highlights in the sill area, the kidney grille frame and the rear also varies: For the E-Copper and Donington Grey colours, the highlights are always in a matt Frozen Grey metallic finish; for Crystal White pearl effect and Sophisto Grey diamond effect, these highlights are available in either BMW i blue or matt Frozen Grey metallic.

Metallic C1U
E-COPPER
with highlight Frozen Grey metallic[1]

Metallic B97/B96
CRYSTAL WHITE PEARL EFFECT
with highlight BMW i Blue[1] or Frozen Grey metallic[1]

Metallic P5Y
DONINGTON GREY
with highlight Frozen Grey metallic[1]

Metallic C23/C22
SOPHISTO GREY BRILLIANT EFFECT
with highlight BMW i Blue[2, 3] or Frozen Grey metallic[2, 3]

[01] 20" BMW i light alloy wheels turbine styling 444 with mixed tyres, BMW EfficientDynamics[1, 2] **[02]** 20" BMW i light alloy wheels turbine styling 625 with mixed tyres[1] **[03]** 20" BMW i light alloy wheels Radial-spoke style 516 Bicolor with mixed tyres[1]

[04] 20" BMW i light alloy wheels Radial-spoke style 516 with mixed tyres[3, 4] **[05]** 20" BMW i light alloy wheels Radial-spoke style 516 Jet Black with mixed tyres[1] **[06]** 20" BMW i light alloy wheels W-spoke style 470 with mixed tyres[1]

[1] Available as optional equipment.
[2] Standard for BMW i8 Coupé.
[3] Standard for BMW i8 Roadster.
[4] Exclusively available for BMW i8 Roadster.

■ Standard equipment ☐ Optional equipment

INTERIOR DESIGN CARPO.

The interior design Carpo inspires with innovative aesthetics and high-quality comfort. The high quality of the individual elements as well as the consistently novel composition of exquisite materials in the interior are impressive.

INTERIOR DESIGN CARPO IVORY WHITE IN THE BMW i8 ROADSTER.

[01] Interior design Carpo ivory white: sporty and noble combination in leather colour Amido/ivory white. **[02]** Coloured accents characterise the sport leather steering wheel. **[03]** Exclusively in the new BMW i8 Roadster, the leather ‚Spheric' ivory white gets an additional dark contrast and decorative stitching.

THE EQUIPMENT FOR THE BMW i INTERIOR DESIGN CARPO:

- ■ Sport leather steering wheel in Black with contrast ring in Satin Silver
- ■ Sports seats in full-grain leather ‚Spheric' perforated ivory white or in full-grain leather ‚Spheric' perforated Amido
- ■ Interior colour in black/ivory white or in black/Amido
- ■ Instrument panel in Natural leather Exclusive Black and Natural leather Exclusive Ivory White or in Natural leather Exclusive Black and Natural leather Exclusive Amido
- ■ Door sill finishers in Amido metallic with "i8" designation
- ■ Door and side panel in Natural leather Exclusive black
- ■ Door panels in Natural leather Exclusive Ivory White or in Natural leather Exclusive Amido
- ■ Headliner anthracite
- ■ Interior trim finishers in Amido metallic

INTERIOR DESIGN CARPO AMIDO BLACK.

[01] The dark leather colour ‚Amido' of the full leather trim Carpo is particularly apparent because of the discreet colour accents in the decorative stitching. **[02]** Coloured accents characterise the sport leather steering wheel. **[03]** The full leather trim ‚Spheric' in Amido Black with accentuating decorative stitching.

INTERIOR DESIGN CARPO IVORY WHITE IN THE BMW i8 COUPÉ.

[01] Classic colour contrast: light and generously proportioned full-grain leather 'Spheric' ivory white and anthracite-black Natural leather Exclusive. **[02]** The sport leather steering wheel with Satin Silver accent. **[03]** The full leather trim 'Spheric' ivory white in the new BMW i8 Coupé with decorative stitching in discreet contrast colour.

■ Standard equipment ☐ Optional equipment

THE INTERIOR DESIGN ACCARO.

The interior design Accaro[1] with its distinct material and colour contrasts emphasises the visionary and sustainable vehicle concept and gives it a lively character. This is what the future of athletic mobility looks like.

[01] Expressive details in the interior: The leather upholstery E-Copper with textile accents. **[02]** The sport leather steering wheel is characterised by accents in Satin Silver **[03]** Natural leather Exclusive E-Copper and additional details in Anthracite E-Copper.

THE EQUIPMENT FOR THE BMW I INTERIOR DESIGN ACCARO:

- ■ Sport leather steering wheel in Black with contrast ring in Satin Silver
- ■ Sport seats in Natural leather Exclusive E-Copper/Amido with Anthracite E-Copper fabric accent
- ■ Interior colour in E-Copper/Amido
- ■ Instrument panel in Natural leather Exclusive Black and Natural leather Exclusive Amido[1]/Instrument panel in Natural leather Exclusive Black and Natural leather Exclusive Amido with Gold brown[3] accent stitching
- ■ Door sill finishers in Amido metallic with "i8" designation
- ■ Door and side panel in Natural leather Exclusive Amido
- ■ Door panels in Natural leather Exclusive Amido[2]/Door panels in Natural leather Exclusive Amido with Gold brown[3] accent stitching
- ■ Headliner anthracite
- ■ Interior trim finishers in Amido metallic

[1] Available as optional equipment.
[2] Exclusively available for BMW i8 Roadster.
[3] Exclusively available for BMW i8 Coupé.

THE INTERIOR DESIGN HALO.

The BMW i interior design Halo[1] defines luxury in a sustainable way. The full leather trim combines high quality with a natural aesthetic. Stylishly, classic materials and colours are interpreted under the „Next Premium" concept.

[01] The dark interior appears particularly elegant in combination with bright contrasts. **[02]** The sport leather steering wheel is characterised by accents in BMW i Blue. **[03]** The dark leather colour Dalbergia brown of the full leather trim ‚Spheric' is particularly apparent because of the discreet colour accents in the decorative stitching.

THE EQUIPMENT FOR THE BMW i INTERIOR DESIGN HALO:

- ■ Sport leather steering wheel in Dalbergia Brown with BMW i Blue contrast ring
- ■ Sport seats in Natural leather Exclusive 'Dalbergia Brown' with Anthracite fabric accent and BMW i Blue double lapped seams
- ■ Interior colour in Dalbergia brown/Carum grey
- ■ Instrument panel in Natural leather Exclusive Dalbergia brown and Natural leather Exclusive Carum grey
- ■ Door sill finishers in Amido metallic with "i8" designation
- ■ Door and side panel in Natural leather Exclusive with Dalbergia brown fabric accent
- ■ Door panels in Natural leather Exclusive Carum grey
- ■ Headliner anthracite
- ■ Interior trim finishers in Amido metallic

■ Standard equipment □ Optional equipment

EQUIPMENT HIGHLIGHTS.

01 □

02 ■

03 □

04 □

05 □

06 □

07 □

08 □

09 ■

10 □

11 □

12 □

13 □

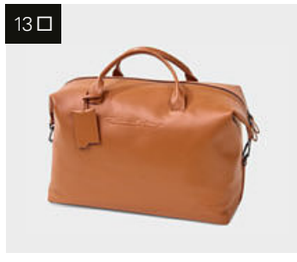

[01] BMW Laserlight: double the maximum illumination range in high-beam mode of up to 600 m. **[02]** The LED rear lights have wonderfully designed light banks in the U-shape typical of BMW i. **[03]** The Comfort access system allows passengers to enter the car via the front doors without having to actively use the key.[1] **[04]** The light projection[2] is part of the light package: When opening the hinged door, the i8 logo is effectively projected onto the street, illuminating the area in front of the door.**[05]** The Travel Package offers various storage options for utensils and drinks, a 12V power socket, and a card holder made of 'Nappa' leather.[2] **[06]** The Lights package features numerous LED lights, both inside and outside for increased convenience and creates a stylish look for the interior. **[07]** Exclusive ceramic version of the gear lever and border around the iDrive controller incl. "i8" engraving.

[08] Interior trim finishers 'DryCarbon' on the instrument panel, centre console, and door handles. **[09]** The Sport leather steering wheel with a thick rim and contoured thumb rests has an exceptionally pleasant, high-grip feel. **[10/11]** The aerodynamics package[3] with front splitter and spoiler lip at the rear improves driving dynamics and ensures even better driving characteristics.

[12] The seat belts for the driver and front passenger seats appear in BMW i Blue. They provide the same functionality as the standard three-point seat belts. **[13]** The hand-made BMW i Bag i8 Roadster Edition[4] in E-Copper. Perfectly adapted for the new BMW i8 Roadster and precisely tailored to fit into the storage compartment.

[1] Standard for BMW i8 Coupé.
[2] Exclusively available for BMW i8 Roadster.

[3] Available from 07/2018.
[4] Exclusively available in the BMW Lifestyle Shop.

■ Standard equipment ☐ Optional equipment

EQUIPMENT HIGHLIGHTS.

01 ■

02 ☐

03 ☐

04 ☐

05 ■

06 ☐

07 ☐

08 ☐

09 ■

10 ☐

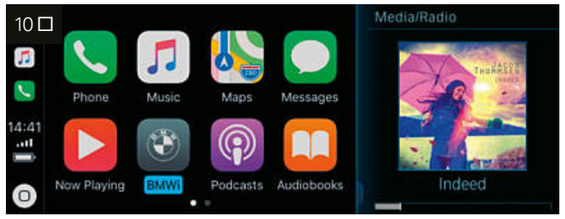

11 ☐

[01] Multifunction for steering wheel can be used to operate the telephone, voice control and audio functions, as well as the Manual Speed Limiter. **[02]** ConnectedDrive Services enables the use of the digital mobility assistant BMW Connected in the vehicle as well as the ConnectedDrive functions. **[03]** The HiFi loudspeaker system Harman Kardon with an external 360 W amplifier consists of twelve speakers including two central subwoofers[5].

[1] Inductive charging for Qi-compatible mobile phones is possible. Special charging cases are available from Original BMW Accessories for selected smartphones that do not support Qi inductive charging.

[04] Telephony with wireless charging offers a comprehensive telephony package with Bluetooth connectivity and the technical capacity for a WiFi hotspot.[1] **[05]** Cruise control with braking function saves any selected speed above 30 km/h and maintains it even while going downhill. **[06]** The BMW display key shows various information about the vehicle's status and allows selected functions to be controlled with an integrated touch display.

[2] This feature is only available in conjunction with ConnectedDrive Services and a navigation system.
Some ConnectedDrive Services may differ between countries. Please consult your local BMW partner for more information.

[07] Real Time Traffic Information almost instantly delivers traffic information about motorways, country roads and main roads, as well as numerous urban routes.[2] **[08]** The full-colour BMW Head-Up Display projects information relevant to the journey directly into your field of vision.[3] **[09]** The Navigation system Professional has, amongst other things, a high-resolution 8.8" touch display screen, radio, DVD drive, and 20 GB free storage space. **[10]** Preparation for Apple CarPlay® supports the convenient use of selected iPhone® functions via the vehicle's user interface.[4] **[11]** Driving Assistant: Lane Departure Warning, Approach control warning, Person warning, High-beam assistant, Speed Limit Info, Rear view camera and Surround View.

[3] The information in the BMW Head-Up Display is not fully visible when viewed through polarised sunglasses. Content shown will depend on the equipment options chosen. Further optional equipment is required to display specific items.
[4] Apple CarPlay® compatibility and supported functions depend on the model year and the software installed on the iPhone®. When the Apple CarPlay® preparation is in use, selected vehicle data is transferred to the phone. The mobile phone manufacturer is responsible for any further processing of this data.
[5] Eleven loudspeakers in the BMW i8 Coupé.

BMW i PURE IMPULSE CARD.

THE BMW i PURE IMPULSE EXPERIENCE PROGRAMME.

As members of the BMW i Pure Impulse Experience Programme, BMW customers have three years of access to the most innovative ideas and trends in a variety of lifestyle areas, including travel, culture, dining, design and more.

The heart of the programme are the carefully selected exclusive events and privileges – from local to global. Every three months, holders of a BMW i Pure Impulse Card receive a programme guide with information about these events and privileges. The programme will be digitally continued with its own on-line web app and newsletter.

BMW FINANCIAL SERVICES.

The BMW Financial Services product portfolio on sustainable and emission-free mobility is as sensational and remarkable as the new BMW i8 Roadster and the new BMW i8 Coupé – custom-made for BMW i8 drivers, who are inspired by the new plug-in hybrid sports car.

BMW FINANCE AND BMW LEASING. BMW Finance offers customised plans to support you on the way to your very own BMW i car and forms the basis for all other insurance and mobility products provided by BMW Financial Services. With standard financing, you keep your liquidity while benefiting from a fixed interest rate over the entire term. The vehicle belongs to you after the end of the term. The flexible leasing options from BMW Financial Services make your dream of driving pleasure in the new BMW i8 a reality, while you preserve your desired financial leeway. Whether you drive your BMW i8 purely for business or mainly for pleasure.

BMW i WALLBOX: Thanks to the BMW Financial Services offers to finance your BMW i Wallbox, you are equally flexible when it comes to installation and servicing of your private charging station. Additional offers for your BMW i Wallbox are the comfortable installation service or the innovative power solutions from the BMW green energy program.

BMW AUTOMOTIVE INSURANCE: Our bespoke insurance products will also give you a feeling of complete security. Comprehensive third-party cover, a flexible choice of excess level and professional repairs in a BMW i authorised garage in the event of damage - all these form the basis of our insurance solutions.

BMW ADD-ON MOBILITY: So that you are always flexible even on short notice – no matter when and where. When you need more space for certain journeys, simply switch over to a conventional BMW model.

BMW SERVICES.

FIND BMW i AGENTS: You can find BMW i agents in your vicinity through www.bmw-i-agent.com The BMW i agents look forward to your visit and will be happy to advise you on any questions you have about BMW i.

CUSTOMER SERVICE: Here you will be provided direct, personal and expert assistance. You can reach the BMW i customer service Mon–Fri from 8:00 a.m.–6:00 p.m. at 0049 (0) 89 1250 1616 0 or via email at: kundenbetreuung@bmw-i.de

* In cooperation with SIXT GmbH & Co. Autovermietung KG.

THE NEW BMW i8 ROADSTER AND THE NEW BMW i8 COUPÉ.

Technical data		BMW i8 Coupé	BMW i8 Roadster
Weight			
Unladen EU[1]	kg	1610	1670
Synchronous electric motor			
Top performance	kW (hp)	105 (143)	105 (143)
Max. torque	Nm	250	250
BMW TwinPower Turbo engine[2] (rear axle)			
Cylinders/capacity	–/cm³	3 / 1499	3 / 1499
Rated output/rated engine speed	kW (hp)/rpm	170 (231) / 5800–6000	170 (231) / 5800–6000
Max. torque	Nm/rpm	320 / 3700	320 / 3700
System output			
Rated output	kW (hp)	275 (374)	275 (374)
Max. torque	Nm	570	570
Performance			
Top speed	km/h	250[7]	250[7]
Top electric speed	km/h	120[7]	120[7]
Acceleration 0–100 km/h	s	4,4	4,6
Fuel consumption[2, 3]			
Combined fuel consumption	l/100km	1,9	2,1
Energy consumption, combined	kWh/100km	14,0	14,5
CO_2 emissions	g/km	42	46
Tank capacity (optional)	l	30 (42)	30 (42)
High-voltage battery			
Battery type/gross battery capacity	in kWh	Li-Ion / 11,6	Li-Ion / 11,6
NEDC electric range (official figures)4	km	55	53
Charging time (AC rapid charge with BMW i Wallbox)[5, 6]	h	ca. 3:06	ca. 3:06
Charging time (AC with standard charging cable at a conventional power socket)[5]	h	ca. 4:30[8]	ca. 4:30[8]

[1] Figures quoted are based on a 90% full tank and a driver weight of 75kg. Unladen weight applies to vehicles with standard equipment. Optional equipment may affect the weight of the vehicle, the payload and the top speed if the selected equipment has an impact on the vehicle's aerodynamics.
[2] Performance data of petrol engines apply to vehicles using RON 98 fuel. Fuel consumption data apply to vehicles using reference fuels in accordance with EU Regulation 2007/715. Unleaded RON 91 and higher with a maximum ethanol content of 10% (E10) may also be used. BMW recommends RON 95 super unleaded petrol.
[3] The fuel consumption and CO2 emissions figures shown were determined in accordance with the measurement process as defined by European Regulation (EC) 715/2007 in the version applicable at the time of type approval. Data refer to a vehicle with base-level equipment in Germany, and the ranges account for differences according to the selected wheel and tyre size and may change during the configuration process. Figures have been determined on the basis of the new WLTP legislation and have been converted back into NEDC figures for comparability. For these vehicles, values other than those specified here may apply for the assessment of taxes and other vehicle-related charges that are (also) based on CO2 emissions.
[4] Range depends on various factors, in particular: individual driving style, route characteristics, outside temperature, heating/air conditioning, pre-conditioning.
[5] Dependent on the local electricity infrastructure. Charging time corresponds to a 100% charge.
[6] 3.7 kW 16 A 1 phase.
[7] Electronically limited.
[8] Provisional figures; any missing figures were unavailable at the time of publication.

The lithium-ion high-voltage battery is characterised by its long service life. However, should a defect occur in the high-voltage battery within eight years and the first 100,000 km, your BMW i Agent will grant you a free rectification. For details, please refer to the BMW i Battery Certificate.

CO^2 emissions caused by the production and supply of fuel or other energy sources were not taken into account when determining CO^2 emissions.

TECHNICAL DATA.

BMW i8 Coupé

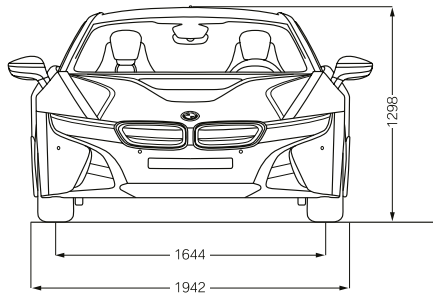

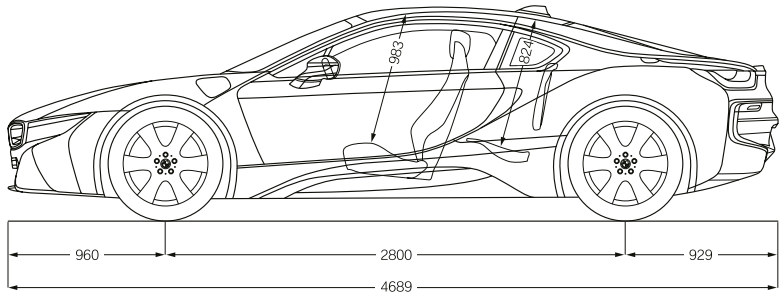

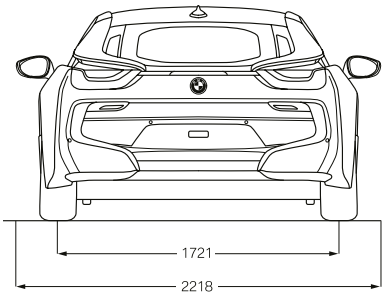

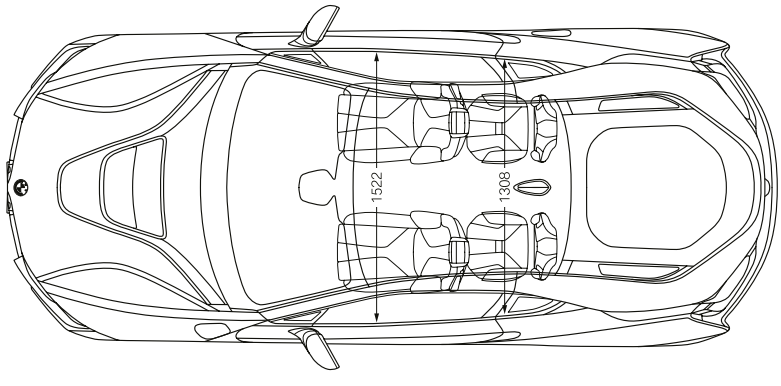

BMW i8 Roadster

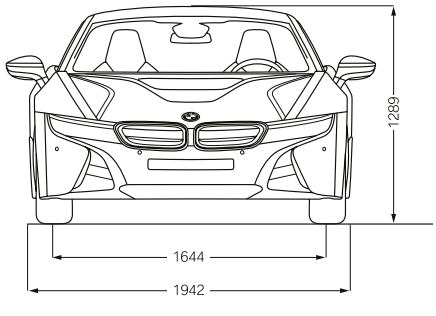

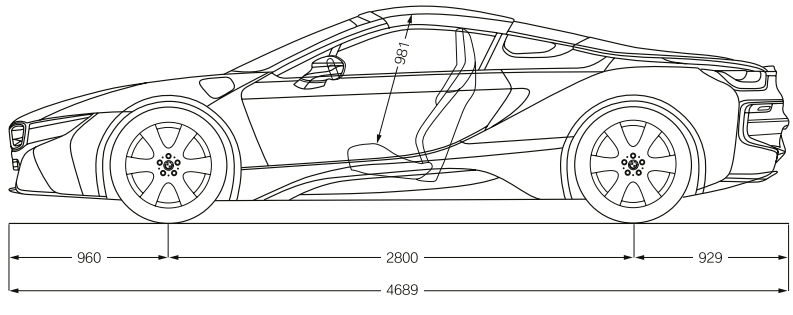

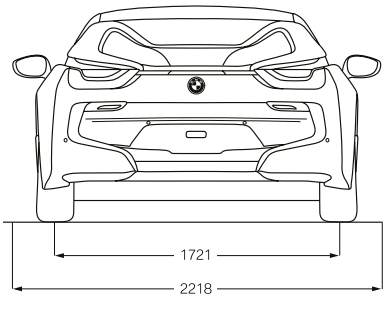

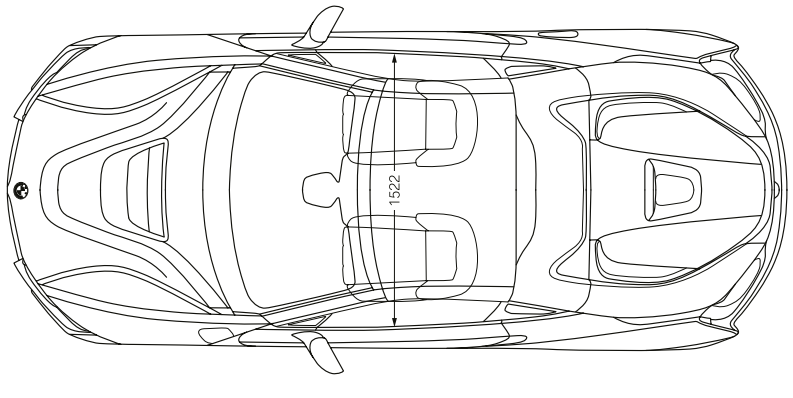

All dimensions in the technical drawings are given in millimetres.
With roof fin, the height is 1297 mm.

BMW i8 ROADSTER:
Plug-in hybrid drive [electric motor at the front, 105 kW (143 hp)/ BMW TwinPower Turbo 3-cylinder petrol engine at the rear, 170 kW (231 hp)], 20" BMW i light alloy wheels Radial-spoke style 516 Bicolor with mixed tyres, exterior colour in E-Copper with highlight Frozen Grey metallic, BMW i interior design Accaro with seats in Natural leather Exclusive E-Copper/Amido with Anthracite E-Copper fabric accent, interior trim finishers in Amido metallic, headliner Anthracite.

BMW i8 COUPÉ:
Plug-in hybrid drive [electric motor at the front, 105 kW (143 hp)/ BMW TwinPower Turbo 3-cylinder petrol engine at the rear, 170 kW (231 hp)], 20" BMW i light alloy wheels Radial-spoke style 516 Jet Black with mixed tyres, exterior colour in BMW Donington Grey with highlight Frozen Grey metallic, BMW i interior design Accaro with seats in Natural leather Exclusive E-Copper/Amido with Anthracite E-Copper fabric accent, interior trim finishers in Amido metallic, headliner Anthracite.

The models illustrated in this brochure show the equipment and configuration options (standard and optional) for vehicles produced by BMW AG for the German market. Alterations in standard and optional equipment and the configurations available for the different models, as described in this brochure, may occur according to the specific requirements of other EU member states. Please ask your local BMW partner about the various versions that are offered depending on the country. Subject to change in design and equipment.

© BMW AG, Munich, Germany. Not to be reproduced wholly or in part without prior written permission of BMW AG, Munich.

411 009 102 20 1 2018 BM. Printed in Germany 2018.